CRANE COURIER

JANUARY

Happy New Year

Management Office
386-304-6777 option #4

Gate House 386-304-9301

Golf Course 386-767-4653

Crane Roost 386-304-2894

Sales Office 386-304-0983

Crane Lakes
1850 Crane Lakes Blvd.
Port Orange, FL 32128

Crane Lakes
GOLF & COUNTRY CLUB

From the Management Office...

RENT IS DUE ON THE 1st of EACH MONTH

Remember, your rent is due on the 1st of each month. Late fees begin on the 7th day of the month. To avoid late fees, please have your rent in the office by the 1st. Late fees **WILL BE CHARGED** on the 8th day, no exceptions.

GOVERNMENT & UTILITY CHARGES/CABLE FEE INCREASE/RENT INREASE

Crane Lakes Management would like to say "Thank You" to so many of our residents for the timely payment of the Government and Utility charges. Please be advised that anyone who has not paid the charges in January will receive a "Payment Demand" notice. Payments made will go to any outstanding charges first. **The Government and Utility Charges is due January 1, 2017 in the amount of $459.18. Please remember that cable is now $47.75 and your rent increase takes effect this month. If you have any questions concerning your payment, please call the office.** .

Reminder:

GATEHOUSE POLICIES

There have been many questions on what the policy is for vendors and guests coming into the community. See below the policies that management would like followed:

1. Call the gatehouse to let them know you are expecting a vendor or sale people coming to your residence. Please be sure they are licensed and insured for your own protection.
2. Call the gatehouse for all family and friends that come after 9 pm or you will be called no matter what time it is. If there is no answer, they will be turned away and not allowed to come into the community.
3. If you notice anything suspicious (people/vehicles/activity) call the Port Orange Police Department at 911 or 386-756-7400-non-emergency number. Our gate employees are not security guards and are only considered gate attendants.

Please be sure to check and make sure your garage doors are closed and your cars are locked before retiring. **Make sure you follow the rules and do not park on the street overnight**. While walking at night or early morning, please be sure to have a reflective device or clothing so you will be spotted. It is hard to see people at night and there are some dark spots. THE SPEED LIMIT IS 20 MPH IN THE ENTIRE COMMUNITY. **PLEASE BE SURE NOT TO EXCEED THE SPEED LIMIT FOR THE SAFTEY OF ALL RESIDENTS AND GUESTS.**

PETS

Please be reminded that pets must be on a leash at all times and are not allowed to be tied up outside or running loose at any time. You may walk them in the streets or on the sidewalk. **All pet droppings must be picked up and discarded sanitarily at all times.** You may not walk them on the golf course or in your **neighbor's yard**. Common Areas are acceptable except for the pool area. Management has received numerous complaints. Please follow the rules for all your pets.

SPEEDING/RESIDENT GATE

Please be advised that the speed limit in the community is 20 MPH. The management office is receiving complaints with speeding cars and golf carts. Please do your part and watch your speed and please advise guest(s) to do the same. We need to make sure everyone abides by the speed limit for the safety of all. Thank you for your help in this matter.

YOUR MANAGEMENT STAFF:

Vicky Moore—General Manager
John McCloskey-Community Manager

Office Hours
Monday through Friday
10 a.m. to 12 p.m. and 2 p.m. to 4 p.m.
Closed Saturday & Sunday.

Please direct any maintenance requests, complaints and/or suggestions to our main office in the Clubhouse:

Telephone: (386) 304-6777
Email: cranelakes@cfl.rr.com
Fax: (386) 304-9547
Mail: Crane Lakes, 1850 Crane Lakes Blvd., Port Orange, FL 32128

Crane Lakes
GOLF & COUNTRY CLUB

News from YOUR Golf and Country Club!

Tips from the Tee : Soft and Low hands in the Bunker

Do you ever wonder how the tour pros make the ball land so softly on the green while making the ball spin out of greenside bunkers? The fact is, when you hold the club too tightly, as most amateurs do, the ball has a tendency to jump off the clubface with a mind of its own. The next time you're faced with a tricky greenside bunker shot try this. Loosen your grip, lower your hands with a wide stance, and make an aggressive swing while sliding the clubface under the ball. You'll be amazed at how high and soft you can get shots to come out of the greenside bunkers.

Rod Perry, PGA Head Golf Professional

Congratulations to our 2017 Mens Club Champions

Gross: Paul George 68-70-70= 208 (+10)

Net: Bill Baril 66-66-52= 184 (-14)

Saturday Golf Clinics

10AM - 11AM $10 per person

January 2017

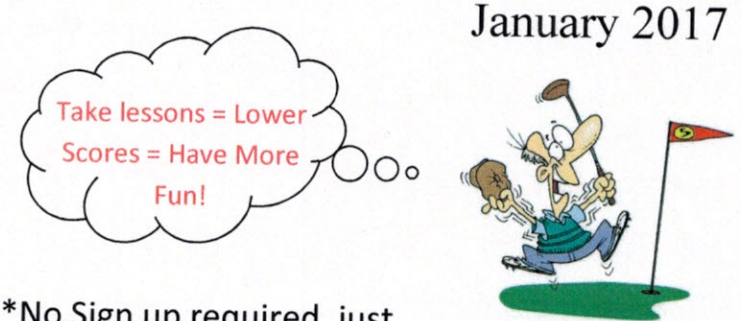

*No Sign up required, just **SHOW UP** *Different topics

1/7: Putting: How to get the long ones close to avoid the dreaded 3 Putt

1/14: Greenside Bunkers

1/21: Driver: BOMB it off the Tee

1/28: Irons Made easy

Check our Golf Website

*If you are a Member of the Golf Club please make sure you are registered on the website as a member. If you are not a Golf member and want to stay informed about the course you can register as a guest. Announcements and emails come from the website www.CraneLakesGolf.com and

CraneLakesGolf

Just a Friendly Reminder

Please **RESPECT** the Privacy of our homeowners at all times.
Searching for golf balls that are **KNOWN** to be out of bounds is **STRICTLY PROHIBITED.**

From a golf operations standpoint we make every effort to inform our non-resident golfers and members of this policy. It is written on the scorecard, on the informative headliner of the Crane Lakes carts, and it is mentioned by the starter/cart attendant prior to teeing off on the 1st hole. Unfortunately, situations are going to occur where the homeowner feels trespassed upon and the golfer simply wants to find his/her golf ball. We ask that all parties involved act appropriately in these situations and inform the golf shop in a timely manner.

Upcoming Events

Jan 11: WGA Rules Clinic (with FREE Wine and Champagne of course - 3:00 Golf Shop)
Jan. 22: LPGA Girls Golf Clinic
Feb. 1, 3, 8, and 10: MGA Match Play
Feb. 16: WGA Cupids Arrow Golf Tournament
March 3: Crane Lakes Invitational Pro-Am
March 4-5: Crane Lakes Invitational (Florida Professional Golf Tour)
March 8, 15: MGA Member-Member
March 24: Crane Lakes Ladies Invitational
March 27: North Florida PGA Pro-Lady

Please visit the 2017 Calendar on the www.CraneLakesGolf website and the calendar posted on the Bulletin Board for upcoming events.

WHAT'S HAPPENING AT THE ROOST

January 7, 2017 | *Derryck Lawrence*

January 14, 2017 | *Solid Gold*

January 28, 2017 | *Randy Siverson*

Come check out our new menu selections if you haven't already.

They're delicious.

Crane Lakes

MESSAGE FROM YOUR HOA BOARD

Happy New Year!! It's time for toasting, reflecting and making resolutions. Here's one that would be easy to keep! Attend the HOA Monthly Informational Meetings. We would love to see you there. Thanks to all who took time out from their busy holiday schedules to attend the HOA Annual Meeting in December. At this meeting we passed the 2017 budget and elected four directors. Congratulations to Bob Baker, Diane Grzelak, Dennis McCombs and Tom Silk. I'm sure they will continue to serve you well. Don't forget to attend and check in at the January Information Meeting. We will be drawing winners for four gift cards from those who attended Information Meetings during 2016.

Thank you to Paul Keitz, Ed, & Joyce Thurston, Joan Diagneault, Tom Silk and all those who helped us have a successful election process. We appreciate the time and effort expended by all.

For the holidays our community looked bright and festive to resident and all of our visitors. The beautifully decorated Ballroom complemented the overall effect. On behalf of the HOA we would like to say "kudos" and thanks to Crane Lakes Management, notably, John and his staff, and Kay Gagarin and her committee. Thanks also to all the residents who decorated their homes. There was certainly a holiday atmosphere throughout our Crane Lakes Community.

December in Crane Lakes was a time of caring, sharing and merry making! On December 2, the community was aglow as 69 golf carts participated in our "sleigh ride." Spectacular describes this year's Christmas Golf Cart Parade which included innovative ideas and of course many strains of Christmas music. As Bill and Barb Hawkins lead us through many of the Crane Lakes streets, we were greeted by awed spectators having driveway celebrations. What a fun night! Thanks to Barb and Bill who once again organized this event. Barb and Dave Perry, thank you for stepping in at the last minute to finish up our ride through Crane Lakes and back to the Roost.

The December fun continued on December 3, with an intimate Christmas Dance for 200 people! The music was invigorating and the dance floor was full. Thanks to Iris and Bob Obie and Iris Eschrich and their committee for an evening of laughs and dancing. Thanks also to the Crane Lakes Dancers for their performance of the "Dance of the Wooden Soldiers."

Special thanks to Crane Lakes Management, especially Vicki, John, Matt and their staffs for food, camaraderie and entertainment at the Annual Holiday party. Good food, good music and lots of friends, no better way to celebrate the Christmas season. We felt the holiday spirit throughout the Clubhouse and Roost.

MESSAGE FROM THE BOARD CONTINUED:

We are also looking forward the 2016 New Year's Eve Party. Thank you, Barb and Bert Risdon for chairing this event. We're certain it will be successful.

The spirit of giving was once again demonstrated by all of our residents. Both the Toys for Kids and Food drive were very successful. Crane Lakers were generous and helped many needy Port Orange families. Thank you, Tom and Jean Hoon and Barb and Bill Hawkins for chairing these drives.

Because you passed our Budget, the HOA will be purchasing a new sound system for the Ballroom. Thank you. We will keep you updated on our progress. Thanks to Denis McCombs for taking the lead in this area. Our Block Captain Committee has also been updated. They will help us in our Membership Drive for 2017. Again, thank you, Denny for organizing the group.

Please check the calendar for the many fun events planned for 2017. We begin the year with a Crane Lakes Talent Show and an evening with a Neil Diamond Impersonator. We welcome you to join us. Details can be found in this Courier.

At our January Information Meeting we will be having our drawing for meeting attendance during 2016. We will also be having the Induction of our new Board Members. We hope to see you there.

HOA OFFICERS

President – Angie Hucknall

Vice-President – Tom Silk

Treasurer – Diane Grzelak

Secretary – Jean Hoon

Director – Bob Baker

Director – Dennis McCombs

Director – Terry Terranera

EXTRA MEDICAL EQUIPMENT Do you have extra medical equipment (walker, wheelchair, shower chair, etc.) that you would like to make available for use by you Crane Lakes neighbors? Call: Mary Jane Colagross 763-8142 Joan Melanson – 763-1216 REMEMBER TO RETURN THE ITEMS YOU HAVE WHEN YOU NO LONGER NEED THEM

****

The 500 Club

Congratulations to George Lemoine for winning $500, to Tom Hoon for winning $250 and to Doreen Browning for winning $100 in the "500 Club" drawing held at the H.O.A. Informational Meeting on December 8, 2016!
The next drawings will be for $100 H.O.A. Informational Meeting January 12th.

If you would like to get the emails that go out on a weekly basis, please send an email to cranelakes01@gmail.com. In this email we put what is currently available for social activities, and programs that are coming up. This is being used as a Community Service Network, to keep everyone up to date on what is happening here at Crane Lakes.

Upcoming Meetings Held in the Ballroom

Board of Director's Meeting 1/2/2017 @ 3:00 pm

Information Meeting 1/12/17 @ 7:00 pm

Upcoming Events in the Ballroom

12/31/2016 New Year's Eve Dance

1/2/17 "Undecorate" the Ballroom

Crane Lakes Talent Show, January 14, 2016

AARP Driving Course 1/21/17

A Tribute to Neil Diamond, January 27, 2016

F.M.O. NEWS...

The next meeting is January 2, 2017 at La Costa Village in Port Orange.

MARK YOUR CALENDARS:

The February 6th meeting will be in our ballroom here in Crane Lakes!

ALL residents are welcome to attend. You do not need to be a member of the F.M.O.

Registration is at 9:30 with refreshments.

Applications to join the F.M.O. are in the hallway across from the gym. Just fill out and mail to the F.M.O. office to join. $25.00 for 1 year, $65.00 for 3 years.

Bill Hawkins – Park Representative

CRANE LAKES' GOT TALENT

TALENT SHOW
FREE _ RESIDENTS ONLY

SATURDAY, JANUARY 14, 2017
7:00-9:00 PM
DOORS OPEN AT 6:30 PM

BYO DESSERT
BEVERAGE
AND SNACKS

MUST HAVE TICKET TO ATTEND!
TICKETS AVAILABLE
BEFORE BINGO, 5:30
(RESERVED SEATING)

SHARE THE WEALTH
DOOR PRIZES

HOA-SPONSORED
NO ONE UNDER 18 MAY ATTEND.

HOA and Non-HOA Members: January 4, 11

Chairpersons: Wif Lesperance, Karen Joseph, Judy Malcolm,

CRANE LAKES HOA

PRESENTS:

A NEIL DIAMOND TRIBUTE

FRIDAY, JANUARY 27, 2017

7:30 - 9:00 (DOORS OPEN AT 7:00)

TICKETS

HOA MEMBERS - $15.00

WEDNESDAY'S 5:30 -6:45

DECEMBER 21 - JANUARY 18TH

NON - HOA - $20.00

WEDNESDAYS JANUARY 11 & 18

BYOB-BYOS (NO ONE UNDER 18 MAY ATTEND)

COFFEE & TEA AVAILABLE

EXPERIENCE THE FEEL OF NEIL

ANGIE HUCKNALL & BARB HAWKINS - CHAIRPERSONS

Thank you to the Crane Lakes Community for their support of toys and money donations to support the Toys for Kids Drive through the Port Orange Fire Department.

You provided toys for 68 children of 25 families from 5 local elementary schools. Thanks to Andy Edwards for her guidance with her 17 years experience working with the Port Orange Fire Dept., on this program.

Thanks also to the people who helped pack the toys for pickup: Andy Edwards, Diane & Rich Grzelak, and Dick Gherlone.

It was truly a rewarding experience and your generosity was amazing.

Jean and Tom Hoon

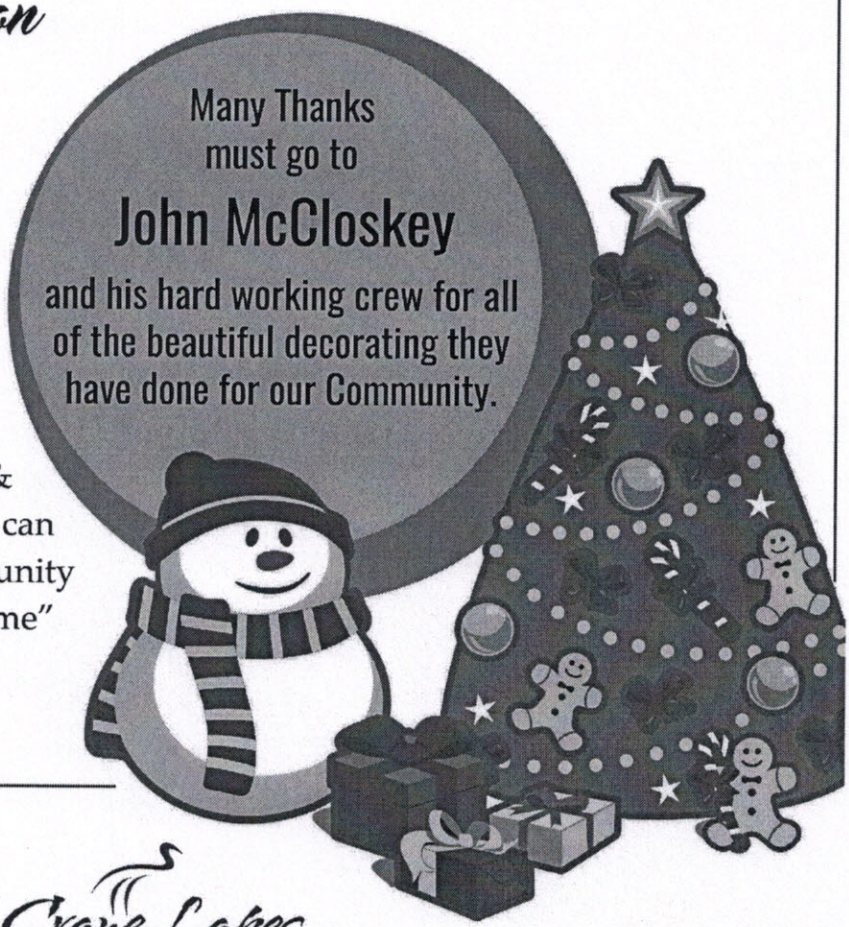

Each year it just gets better & better, don't know how you can do it! You make our Community proud as we drive back "home" and have all of the beautiful lights welcome us home.

Crane Lakes

I would like to take a minute of your time to give out a "big Thank You", for all of the support and love you have given me over the past 17 1/2 years.

It has been my pleasure to type the Courier the past 11 years, for the Community. I know I am leaving it in wonderful capable hands with Robert. He has so much more expertise then I ever had, and it will be a better looking document for all of you to enjoy.

Working at the "Crane Lakes Sales Office" has brought many happy hours showing the lovely homes and our beautiful community to new folks to enjoy. It has been a pleasure sharing the community I love so much, hopefully the new residents will find as much love, support, and fun as I have had while living here.

I am proud to have Helen Briones and Mike Hathaway taking my place in the sales office. They are both people who love Crane Lakes, and are proud to be able to show our Community to the potential new buyers.

We are in the process of finding someone to take my place, working for World Class Cruises, doing the wonderful cruises for you!

Yes, the rumors are true, I will be moving to my home state of Connecticut. I am lucky to be able to be moving in with my sister and brother-in-law, while I wait for my new apartment to become available. This is being done for health reasons, and to be able to be close to family and my oldest son.

Yes, I am giving up three jobs, I have enjoyed doing so much, I will have to find something to take up my time, when it is not snowing outside!

I have loved the past 17 ½ years living here. You have given me many happy memories to cherish. Thank you for always being there, during the happy times, sickness, and the loss of my husband, Ralph. You have a special space in my heart, and you will be missed so very much.

Love,
Andy Edwards

DATES BALLROOM IS BEING USED IN JANUARY

The Ballroom will be closed due to set-up for activities or day of function the following days in January

WE ALL KNOW WE MUST SHARE OUR BEAUTIFUL BALLROOM

SUNDAY, JANUARY 8
6 – 8 WINE CLUB

FRIDAY, JAN 13 SET UP - SATURDAY, JANUARY 14
CRANE LAKES TALENT SHOW
DOORS OPEN AT 6:30PM

SATURDAY, JAN 21 ALL DAY
DRIVERS SAFETY COURSE

SUNDAY, JAN 22 | PRIVATE PARTY 5:00PM

FRIDAY, JANUARY 27
NEIL DIAMOND TRIBUTE
SET UP BEGINS AT 12:00
DOORS OPEN AT 7:00PM

Crane Lakes

JANUARY 2017

SUNDAY	MONDAY	TUESDAY	WEDNESDAY	THURSDAY	FRIDAY	SATURDAY
1	2 7 Zumba 8-9-9-10 Water Aerobics 9:00 – UNDECORATE TREE 9:30 – 12 Pinochia 10:30 – 11:30 Indoor Aerobics 12:30 – 3:00 Mahjongg 12:30 – 3:00 Dominos/Cards 3:00 HOA BOARD MEETING 7-9 Line Dancing - Wif	3 7 Zumba 8-9-9-10 Water Aerobics 10-12 Line Dancing 3 Yoga 6-9 Hand & Foot	4 7 Zumba 8-9-9-10 Water Aerobics 9-10 Line Dancing 10:30 – 11:30 indoor aerobics 11-4 Mahjongg 1-3 Beginner Line Dancing 1-3 Knitting 5:45 – 7 Tickets Sales 6:30 Mahjongg 7:00 Bingo	5 7 Zumba 8-9-9-10 Water Aerobics 10 – 12 Line Dancing 1 Bridge 1 – 3:30 Scrabble/Cards 1 – 3 Quilting Cranes 3:30 Yoga 6:30 Mahjongg	6 7 Zumba 8-9-9-10 Water Aerobics 8-9 Yoga Flow 9 – 10::30 Rockettes 10:30 - 11:30 Indoor Aerobics 12:30 – 4 Mahjongg 1 – 4 Hand & Foot 6-9 Performers	7
8 6 – 8 Wine Club	9 7 Zumba 8-9-9-10 Water Aerobics 9:00 – 10:30 Rockettes 9:30 – 12 Pinochia 10:30 – 11:30 Indoor Aerobics 12:30 – 3:00 Mahjongg 12:30 – 3:00 Dominos/Cards 7-9 Line Dancing - Wif	10 7 Zumba 8-9-9-10 Water Aerobics 10-12 Line Dancing 3 Yoga 6-9 Hand & Foot	11 7 Zumba 8-9-9-10 Water Aerobics 9-10 Line Dancing 10:30 – 11:30 indoor aerobics 11-4 Mahjongg 1-3 Beginner Line Dancing 1-3 Knitting 5:45 – 7 Tickets Sales 6:30 Mahjongg 7:00 Bingo	13 7 Zumba 8-9-9-10 Water Aerobics 10 – 12 Line Dancing 1 Bridge 1 – 3:30 Scrabble/Cards 1 – 3 Quilting Cranes 3:30 Yoga 6:30 Mahjongg *7 HOA GENERAL MEETING*	13 CRANE LAKES TALENT SHOW – SET UP	14 7:00 Crane Lakes Talent Show Doors open at 6:30
15	16 7 Zumba 8-9-9-10 Water Aerobics 9:00 – 10:30 Rockettes 9:30 – 12 Pinochia 10:30 – 11:30 Indoor Aerobics 12:30 – 3:00 Mahjongg 12:30 – 3:00 Dominos/Cards 3:45-5 Yoga-Flow 6-9 Performers	17 7 Zumba 8-9-9-10 Water Aerobics 10-12 Line Dancing 3 Yoga 6-9 Hand & Foot	18 7 Zumba 8-9-9-10 Water Aerobics 9-10 Line Dancing 10:30 – 11:30 indoor aerobics 11-4 Mahjongg 1-3 Beginner Line Dancing 1-3 Knitting 5:45 – 7 Tickets Sales 6:30 Mahjongg 7:00 Bingo	19 7 Zumba 8-9-9-10 Water Aerobics 10 – 12 Line Dancing 1 Bridge 1 – 3:30 Scrabble/Cards 3:30 Yoga 6:30 Mahjongg	20 7 Zumba 8-9-9-10 Water Aerobics 8-9 Yoga Flow 9 – 10:30 Rockettes 10:30 - 11:30 Indoor Aerobics 12:30 – 4 Mahjongg 1 – 4 Hand & Foot	21 HOA ALL DAY DRIVERS SAFETY COURSE
22 PRIVATE PARTY 5:00	23 7 Zumba 8-9-9-10 Water Aerobics 9:00 – 10:30 Rockettes 9:30 – 12 Pinochia 10:30 – 11:30 Indoor Aerobics 12:30 – 3:00 Mahjongg 12:30 – 3:00 Dominos/Cards 3:45-5 Yoga-Flow 6-9 Performers	24 7 Zumba 8-9-9-10 Water Aerobics 10-12 Line Dancing 3 Yoga 6-9 Hand & Foot	25 7 Zumba 8-9-9-10 Water Aerobics 9-10 Line Dancing 10:30 – 11:30 indoor aerobics 11-4 Mahjongg 1-3 Beginner Line Dancing 1-3 Knitting 5:45 – 7 Tickets Sales 6:30 Mahjongg 7:00 Bingo	26 7 Zumba 8-9-9-10 Water Aerobics 10 – 12 Line Dancing 1 Bridge 1 – 3:30 Scrabble/Cards 1 – 3 Quilting Cranes 3:30 Yoga 6:30 Mahjongg	27 7 Zumba 8-9-9-10 Water Aerobics 8-9 Yoga Flow 9 – 10:30 Rockettes 10:30 - 11:30 Indoor Aerobics 12:00 SET UP FOR SHOW 7:30 NEIL DIAMOND TRIBUTE DOORS OPEN AT 7:00	28
29	30 7 Zumba 8-9-9-10 Water Aerobics 9:00 – 10:30 Rockettes 9:30 – 12 Pinochia 10:30 – 11:30 Indoor Aerobics 12:30 – 3:00 Mahjongg 12:30 – 3:00 Dominos/Cards 3:45-5 Yoga-Flow 6-9 Performers	31 7 Zumba 8-9-9-10 Water Aerobics 10-12 Line Dancing 3 Yoga 6-9 Hand & Foot				

Happy Birthday to you

January 2017

1/01 Dee Little
1/01 Kay Smith
1/01 Neal Futran
1/01 Claude Lamontagne
1/01 Betsy Neidlinger
1/01 Ed Husarek
1/02 Nancy Macaluso
1/02 Randy Riley
1/02 Bobby Baker
1/02 Joan Brenon
1/03 Jordan Yesuras
1/04 Tom Alexander
1/04 Karl Mueller
1/04 Joe Warr
1/05 Barbara Plamondon
1/05 Jim McCusker
1/06 Carolyn Litter
1/06 Rosie Morris
1/06 Glen Soderberg
1/07 Yan Overkleeft
1/08 Michelle Ballard
1/08 Angela Powers
1/08 Clifford Alliott
1/08 Gerry Rhatican
1/08 Patricia Possenti
1/09 Jim Hawley
1/09 Diane Davenport
1/09 Fred Ramsey
1/09 George Steele
1/10 Mary Jane Colagross
1/11 Donna Bowmar
1/11 Virginia Hoolan
1/11 Steve Hoose
1/12 Judy Schlotterbeck
1/12 Joy Will
1/12 Linda Vance
1/12 Sherry George
1/12 Robert Connors
1/12 Sandra Connors
1/13 Catheleen Mallory
1/13 Joyce Thurston
1/14 Lucy Popp
1/14 Joyce Duren
1/14 Ray Cuomo
1/15 Alden Dade
1/15 Sunan Bitner
1/15 Don Wenger
1/15 Barb Kirkham
1/15 Roy West
1/16 Martha Wirkutis
1/16 Cecile Leger
1/16 Linda Rocco
1/17 Barbara Hart
1/17 Dorie Schisler
1/17 Linda Black
1/17 David Ehrman
1/18 Joy Yowan
1/18 Barbara Selwitz
1/18 Steve Bauss
1/18 Arthur Brunette
1/19 Yvonne Morgan
1/19 James Bailey
1/19 Gary Clements
1/19 Bill Chenoweth
1/20 Mary Derr
1/20 Carol Higgins
1/21 Kyle Berris
1/21 Richard Boilard
1/21 Ron Peralta
1/21 Steven Barone
1/21 Beth Jones
1/22 Carol Riffey
1/22 Dorothy Sendlak
1/22 Kay Sovereign
1/23 Simone Lancaster
1/23 B.K. Frazier
1/23 Rose Parriott
1/23 Debbie Mirabito
1/24 Charles Drace
1/24 Michael Fitzurka
1/24 Anna Labrecque
1/24 Ann Cannon
1/24 Wilma Kellner
1/24 John Handshy
1/25 Shirley Rogers
1/25 Jack Horner
1/25 Jim Warner
1/26 Sharon Croll
1/26 Dollie Peralta
1/27 Rosella Dunkel
1/27 Joanne Jacksto
1/27 Fran Perrone
1/27 Raymond Sheridan
1/27 Laura Baker
1/27 George Partilla
1/27 Eunice Pender
1/28 Mary Lou Aldrich
1/28 George Blysak
1/29 Don Daigneault
1/29 Diane Whitman
1/29 Joan Cappell
1/30 Kathy Horgan
1/30 Judy Malcolm
1/30 Carol Tevis
1/31 Bob Valko
1/31 Larry Waters

Welcome to Crane Lakes

Ray & Nancy Overturf and Brent Hunt
5443 Eagle Claw Drive
From: Ormond Beach, FL

Natalie D'Errico
5442 Crane Feather Drive
From: Nesconet, NY

Bruce & Nancy Smith
1874 Big Crane Loop
From: Hayward, WI

New Address:
Edward & Carol Kaster
2119 Purple Martin Way
From: Crane Lakes

Crane Lakes

THANK YOU!

Thanks to all the generous residents of Crane Lakes that supported our annual food drive for the Port Orange Police! Also, thank you to the H.O.A. for their generous donation that really helped us! Each year they collect food for their "Santa to the Rescue" program to help feed the many residents of Port Orange that desperately need help! The Port Orange Police support all of us throughout the year! We enjoy being part of this worthy program and help support them!

We had a many items stored at our home for the VIP's to pick up, we then proceeded to the clubhouse to pick up the boxes of food stored there. A big thank you to poor Tom Noonan! Tom happened to be going to the library when he saw us arrive and immediately pitched in to help carry the boxes to the trailer.

We thank you for your support and we have already volunteered to chair this worthy cause again next year! Barb & Bill Hawkins

COURIER ARTICLES

The Crane Courier is printed each month for the enjoyment of all Crane Lakes Residents. It is an important tool to have all of the "happenings" going on each month, here in the Community.

In order to have The Courier be able to be the important piece of communication each month, we must have certain guidelines. If you are submitting a flyer for an upcoming event, please note the following guidelines!

Do not have any dark backgrounds in your flyer. This takes up too much ink and does not copy well. Or a lot of black in your pictures etc.

1. **Before submitting an HOA flyer to be printed, it must be given to your HOA President or Activity Chair to clarify the information.**
2. **The flyer will be a full page the first month**
3. **The flyer will be a half page the second month.**
4. **The HOA Qualify to win will be inserted once a quarter, rather than every month.**
5. **The deadline to submit an article is the 15th of the preceding month. There should not be any articles submitted after this date, in order to have the Courier typed and sent to the printer on time each month. Remember we are not the only item the printer has to print each month, we have to give them the proper time frame.**
6. **Submit your articles in the following manner**
7. **Drop them off at The Management Office**
8. **E-mail them to robert@sartoridesign.com**

A BIG thank you to Kay Gagarin and her Elves for a beautifully decorated Crane Lakes Ballroom for all to enjoy for the Holidays.

****

Trash and Treasure
March 11
7:30-1200
Table reservations will begin at 5:30 pm on January 11th, 2017 on a first come basis. Please be sure that you can commit to stay for the entire event before making a reservation. As we clean up after the holidays please keep in mind that we will welcome any donations for the HOA tables.
We will also be looking for volunteers to help with setups, parking and helping at HOA tables.
Thank you, Bob-207-440-0152
Iris-207-660-5248 or
Vera -386-763-2594

8th Annual Golf Cart Parade

The spirit of the holiday season was plentiful, as new friends & old friends gathered by the tennis courts to begin the 8th annual parade! We had 69 very imaginative carts, each one better than the other...we even had a motorcycle join the parade this year! It was heartwarming to see so many residents cheering us on from their driveways.

Thank you to Barbara & David Perry! When our battery gave out on Crane Lakes Blvd., they willingly stepped forward to lead the parade, even though they were relatively new to the community! Also thanks go to John McCloskey that helped to control traffic and provided us with traffic cones to line up safely!

A HUGE thank you to Matt & Staff at Crane's Roost! They did a great job in serving the huge crowd in a timely manner. They also donated gift cards for a raffle. The $15 cards were won by Barb Hawkins, MJ Colagross & Felicia Frestan, the $25 card by Terry Pavolovsky and the $50 card by Tom Silk.

We wish everyone a Happy & Healthy 2017 and hope you will join the parade next year!

Barb & Bill Hawkins

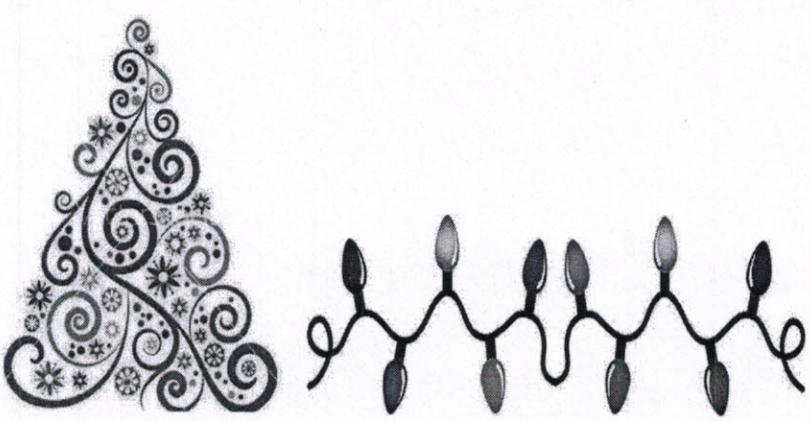

HAPPY NEW YEAR
WELCOME BACK PLAYERS!!!!

"TEXAS HOLDEM"

First and Third Tuesday every month
Check in 5:45 PM in Clubhouse

Games begin 6:00 PM in Clubhouse

Buy-in $10.00
All monies given back in prizes

Call: Bob 207-440-0152 or Fred 386-256-2368

(Games ending no later than 10:00 pm

Dealers are needed!

****

Thank you thank you for the fun and community support in making the Christmas Dance so successful.

We were so lucky to have Mr. and Mrs. Santa Claus come and spend some time as well as our own toy soldiers dancing!

Special thanks to Barb and Bill Hawkins for ticket sales, Helen Briones and Linda Howell for Share the Wealth tickets and to everyone who helped setup and cleanup.

An awesome night spent in the best community ever
Bob & Iris Obie

AS OF JANUARY BUNCO WILL BE CANCELLED UNTIL FURTHER NOTICE

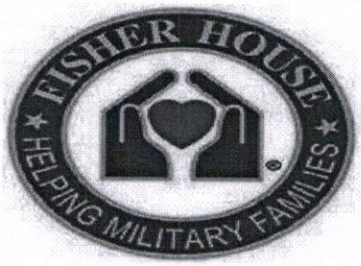

We would like to take this opportunity to thank the volunteers, the participants playing golf, those who purchased signs, and the community for making this our fourth annual "THE VET" golf tournament a huge success.
Once again, thank you for your generosity and help, Joel Howell Chairman, Mike Landau Co-Chairman, and to all our committee.

THANK YOU

My family and I would like to thank everyone for your kind thoughts, prayers & cards during a most difficult of grieving of my dear mother Delores Weedon.

We always received such great support from everyone in Crane Lakes, Thanks for being there for us in our time of sorrow.

And a special thanks to Caroline Shields her dear friend on Crane Feather Dr for being there for her, the last couple months, running errands and sitting with her during this very difficult time.

Rob & Sandy Connors & Family

FISHER HOUSE FOUNDATION, INC.
www.fisherhouse.org

111 Rockville Pike, Suite 420
Rockville, MD 20850-5168

Tel: 301-294-8560
Fax: 301-294-8562
info@fisherhouse.org

December 9, 2016

The VET Golf Tournament
Joel Howell
5465 Red Tail Drive
Port Orange, FL 32128

Dear The VET Golf Tournament:

With your support, the doors to Fisher House are opened to more than 900 families tonight. In our 26th year of service, Fisher House continues to provide and expand free temporary lodging to military and veterans' families so they can be close to their loved ones during hospitalization.

Through the kindness of supporters like you, our mission of providing "a home away from home" continues to grow. Service members, veterans, and their families have been welcomed through the doors of over 70 Fisher Houses across the nation and overseas.

Please know we are very grateful for your gift of $13,200. Thank you for helping us continue our mission to reach more military families during difficult times. We look forward to sharing the Fisher House story with you as we continue to keep Zachary and Elizabeth Fisher's dream alive for those who, with their families, serve and have served our Nation.

Sincerely,
FISHER HOUSE FOUNDATION, INC.

David A. Coker
President

Thank you for this blessing!

Visit www.fisherhouse.org to sign up for the monthly ePatriot e-mail newsletter and/or our biannual magazine, The Patriot. We will never share or sell your contact information.

For IRS purposes, this letter serves as your receipt and acknowledges that no goods or services were received in consideration of your gift. Fisher House Foundation's EIN is 11-3158401.

Friday, February 17, 2017
Featuring Michael Russo
Doors open at 6:30
Tickets – before Bingo 5:30 – 6:45
$7 HOA members – January 18th
$12 Non-HOA members - February 8th
Last day to buy tickets – February 15th
Reserved Seating
BYOB and BYOS
Drawings for door prizes
No one under the age of 18 may attend
Share the wealth tickets will be sold
Chairperson: Jeanne Cox

CRANE LAKES FOOD & WINE CLUB

Our Annual Holiday meeting was held on December 4th with a very nice group of members attending.

Sparkling wine was the selection for our festive meeting and the decorations in the Ballroom added to the event. In addition, the beautifully decorated wine buckets made by Suzie Edelston capped off the evening.

There was a nice selection of Champagne, Sparkling Wines and Prosecco supplied by the members were enjoyed by all.

As usual, our fine cooks provided some outstanding dishes for the evening, including a Root Beer Pulled Pork, A Chicken and Rice casserole, some delicious Shrimp and Live Pate along with Bread Pudding, cream puffs with chocolate icing and assorted candies.

Our next meeting will be on January 8th at which time our annual dues of $5 per person will be due. Please bring cash only at that time.

We will be featuring the wines of Washington State at that meeting which will provide a wide selection to choose from.

We hope everyone will have a great Holiday this year and we look forward to enjoying some great wines in the coming year.

THE EIGHTY LADIES

We wish everyone a Healthy and Happy New Year, the ladies closed the book on 2016 quietly, but look out – they are redy to paint the town or bet on the dogs or do a movie at the new "One Daytona Theatre".

The Girls meet on the 2nd Wednesday of each month from 11 to 11:30 am at the Club House. They have a short business meeting then head out for lunch.

If you are 80 years old or will be by the end of this year (2017), we would love to have you join us.

You know, life is not about being rich, being popular, being highly educated, or being perfect…it's about being real, being humble and being kind.

The Grand Madam 386-761-9960

Robert Sartori is now doing
The Courier
954-319-1970
robert@sartoridesign.com

BUS TRIP TO

SEMOILE CASINO

COCONUT CREEK

SATURDAY, FEBRUARY 04, 2017

Cost is $35.00 per person

NO REFUNDS -- unless bus cancels due to not enough people by JANUARY 20, 2017, then a refund will be issued

$10.00 FREE PLAY

Or call Fran Cherico, a Crane Lakes Resident (386) 265-5502

Bus will depart Crane Lakes at 7:30 am

Please park your cars in the perimeter area of the parking lot by the Tennis Courts, not in the middle, as these spaces must be left open for folks going to the pool and The Cranes Roost.

"COME HAVE SOME FUN"

AARP SAFE DRIVE COURSE

Sharpen your safe driving skills and earn a discount on your auto insurance!

On January 21, 2017, the HOA, through the efforts of Terry Terranera and Bob Norville, has arranged to offer an AARP Driver's Safety Course. This is a six hour course with an hour break for lunch. It will begin at 9:00am and end at 4:00pm.

The safe-driver course usually qualifies you for a discount on your auto insurance. The discount is more than enough to cover the modest $15.00 cost ($20.00 for non-members) charged for the course, although it does vary for different providers.

AARP requires participation from a minimum of 15 individuals to present the course. Please let us know of your interest by emailing Bob at robertnorville@att.net, calling him at 845-649-8061, or dropping the information in the "HOA" mailbox mounted to his railing at 5433Eagle Claw Drive.

Your Name -

Your phone #

Your email address

Responses are required so the necessary arrangements can be made. Thank you for your interest.

Preliminary 2017 Ballroom Calendar

Please Note: The Ballroom has been reserved for these dates. The events may change based on the Event Chair's choice. Additional events (Ice Cream Socials, Pot Lucks, Texas Holdem' etc.) will be added as they are scheduled. Please contact Barbara Risdon if you would like to chair an event. If you would you like to help at an event, contact a chairperson listed below and volunteer.

DATE	EVENT	CHAIRPERSON
Monday, January 2, 2017	Undecorate Tree	Kay Gagarin
Saturday, January 14, 2017	Talent Show	Wif Lesperance
Friday, January 27, 2017	SHOW: Neil Diamond Impersonator	Angela Hucknall & Barb Hawkins
Monday, February 6, 2017	F.M.O. Meeting	Bill Hawkins
Saturday, February 11, 2017	Home, Health & Business Expo	Angela Hucknall & Tom Silk
Friday, February 17, 2017	Doo-Wop Dance	Jeanne Cox
Saturday, March 11, 2017	Trash & Treasure	Bob & Iris Obie
Friday, March 17, 2017	St. Patty's Dance	Bunny Clark
Fri. Apr. 7-Sat. Apr. 8, 2017	Show - Tentative	The Performers

The Crane Lakes Resale Office

Selling homes here in Crane Lakes is what we do far better than anyone else! Our onsite extra effort tends to pay off in the best results that you can expect under any type of selling conditions.

The Crane Lakes Sales Office finished the year with 55 homes sold versus 57 a year ago. For the twelfth consecutive year our office has continued to be the number one way to buy or sell a home in the community. Once again in 2016, we outperformed the combined sales of all of the outside realtors by over 50 sales every year since 2004 !

Please call or stop by to set up an appointment to discuss the potential purchase of one of our listings. Also, feel free to ask us for information if you are considering selling your home coming into the peak selling time frame of the year. We would be very pleased to work with you through the entire process of buying or selling a home here in Crane Lakes.

Our referral offer this month is: bring us a client that contracts the purchase of one of our listings from January 1 through January 31, 2017 and we will thank you with a $100 check after the closing takes place.

Please check out our very nice variety of Crane Lakes listings on www.cranelakes.com. For information or questions email us at doug.cranelakes@gmail.com, or just stop in the office and we will be glad to answer all your listing or sales questions or concerns. Office hours remain: Weekdays from 9 to 4, Saturdays 10 to 2 & Sundays by appointment.

Selling homes in this community is our full time job!

I am excited to announce the addition of Helen Briones and Mike Hathaway to our sales staff. They are both great advocates for our community and truly are positive representatives of Crane Lakes! Welcome!

Happy New Year
from the entire Crane Lakes sales staff

CRANE LAKES ACTIVITIES

WATER AEROBICS - Monday thru Friday
8:00 am & 9:00 a.m.

INDOOR AEROBICS Mon-Wed-Fri 10:30 a.m.

BILLARDS Room
Mondays - Couples 3:30 – 7:30, Tuesdays - Ladies Pool 1 to 4, Wednesdays & Thursdays - Men's Pool 12 to 3, Fridays – Men's Pool 12 to 2, Fridays - Open play all other times, If interested please call: Randy Riley 386-631-3092 , or Jayne 315-489-9038

BINGO: Every Wed at 7:00 p.m.
In the Ballroom. Just a reminder, BINGO is for Crane Lakes residents and their guests. State Laws requires that no one under the age of 18 can play.
Call: Alice Scholtz at 767-5507 or
Betty Christman at 265-1376.

SHUFFLE BOARD: Wed & Fri morning at 10:00. Beginners always welcome! Open play for fun, practice and make new friends. Call: Bill McCollum 908-246-8694. Call Dave deWeill 304-5498 for Tuesday night info.

BOWLING: Tuesday Mornings Fun League.
All Crane Lakes Residents welcome!
Call: Angie Hucknall 265-4626.

BUNCO: BUNCO CANCELLED UNTIL FURTHER NOTICE

COMPUTER CLASSES
Computer Granny, Char Wood meet me in the Roost 2nd Friday of the month 2:00.

STAIN GLASS: Mon, Wed & Fri mornings
8:30 – 12:00 in the Craft Room.
Call: Darlene White 871-6859

SCRABBLE: Thursday afternoon 1:00 in the Ballroom Call: Joan Daigneault 760-9452
Quilting Cranes Thursdays
1:00 – 3:00 in the Ballroom

ZUMBA DVDS – Mon-Sat 7:00 a.m. – 8:00 a.m.
Call: Margaret 492-5709

DOMINOS – Monday afternoons 1:00 p.m. in the ballroom except when there is a Board Meeting we play at 12:30. Call: Carolyn Shields 788-0051

CARDS/DOMINOS: Tuesdays 1:00
call Sadie 763-3003 to see where they are playing in the clubhouse.

Yoga: Flow Monday 3:45 – 5:00, Friday 8 – 9
Call: Jessica 299-2634 –Yoga-Hatha Flow 3-4 Tue
call Shanti 681-7081, Yoga tape Thursday @ 3:00

CARDS: Thursday afternoon 1:00 p.m.
call: Linda McCombs 317-578-2437
Hand & Foot Friday afternoon 1:00 pm

BRIDGE: Thursday 1:00 in the Ladies Card Room
Call: Diane VanEvery 304-9183.

HAND & FOOT: Tuesday evening 6:30 p.m. to about 9:00 p.m. call: Mary Tully 763-1005, Friday at 1:00 p.m.
call: Carolyn Shields 386-788-0051

PINOCHLE: Monday 9:30 – 12:00 Tuesday 1:00 -3:00 in the Ladies Card Room

---

KNITTING, CROCHETING & NEEDLEPOINT
Wed 1:00 p.m. unless an activity is scheduled in the ballroom, then we meet in the Ladies Card Room.
Call: Sadie 763-3003

MAHJONG: National (American) Mahjong Monday & Friday at 12:30 p.m. in the Ladies Cardroom
Call: Shirley Rogers 872-5395
International Mahjong: Wed 6:00 p.m. in the Ladies Card Room Call: Joan Daigneault 760-9452

LINE DANCING FOR FUN AND FITNESS
For beginners and experienced beginners in the ballroom
Tue & Thursday 10:00 – 11:30 a.m
Call: Wif Lesperance 304-5030

Wednesday morning Line Dancing – for beginners—no experience necessary. In the ballroom. Wed 9-10am.
Call: Carolyn 1-262-370-2286

THE KICK"n STEP BEGINNER CLASS in the Ballroom
Wed 1:00 – 3:00 p.m. Call: Carolyn Craska 304-6077.

"THE ROCKETTES" are looking for a few good and steady legs. Mon & Fri 9:00 a.m. to 10:30 a.m.
Call: Jerrie Batson 304-4323

ROUND ROBIN TENNIS – WOMEN
Mon, Wed & Fri 7:30 a.m. Call: Rita McMenamin 492-7047

OPEN TENNIS – MEN
Tuesday, Thursday & Saturday 7:30 a.m.

BOCCE BALL
Come join us at the Bocce Ball Courts Monday's at 10:00 call: Fran Perron 265-1283 if you have any questions.

LADIES BOOK CLUB
We meet in the Ladies card room the third Thursday of the month from 8:30 – 12:00

Crane Lakes

CRANE LAKES RESIDENT CLASSIFIED

Will haul away at no charge any old appliances, AC units or Hot Water Heaters.
Tyrone –Call 307-5608

Golf Carts Repaired | all Types
Call Chuck 386-756-5916
Crane Lakes Resident

Need a CD player latch repaired?
Call Allen 386-308-1463

Alterations, men and women clothing and ironing including spray starch.
Call Muriel 386-767-6380

Pet Sitting – reasonable rates
Call Doreen 386-846-0858

Professional Seamstress
45+ years of experience.
Call Ruth Erickson 386-767-8304

Window Cleaning
10% off 1st time clients!
Alan -- Crane Lakes Resident
386-852-8575

I will drive you to doctor appointments, shopping or run errands for you.
No airport runs.
Contact Jean at 386-492-5222
A Crane Lakes resident.

LOAVES AND FISHES homeless ministry.
Drop off donations 5487 Red Wing Cir or call 352-422-0686.
Our Lady of Hope – Judy Maxwell

Sonny's Driveway painting and interior painting for your home.
Call Sonny 908-635-1294
Crane Lakes Resident

Bill's Packing Service 40+years in trade, pack before you make your move.
Call 386-265-5502

Angel & Oracle Card Reading $50.00 Call Felicia at 386-492-5731

Crane Electrical Connection, Inc. for all of your outside electrical needs.
Surge Protectors installed.
Call Roger 386-788-2174

Need help with Apple Product or utilizing Apps. Also can help out with other computers.
Call Diane Grzelak at 846-6998

Nurse Case Manager
37 years of healthcare
Will help you find the organization who can help with your needs.
Call Dale at 386-690-3595

Massage Therapy House Calls
"A Touch of Grace"
Call 407-463-6101

Criminal, Civil & Personal Investigations
Licensed - 34 years Law Enforcement Experience.
Call Victor 412-760-9778

So you like jewelry?
Why not host a Premier Jewelry Party and get yours FREE!
Call Linda Jakel – Premier Jeweler
618-514-1310

Sea Breeze Cleaning Service by Lisa
Call to schedule
443-912-6850

Crane Lakes

Crane Lakes Golf and Country club Menes Golf Association December 2016 Results

November 16, 2016
2 Low Net

1st Place: Al Beachum, Bernie Bailey, Dave Sanft & Doug Bell
Score: 100

2nd Place: Greg Niehaus, Kevin Fischer, George Chadwick & Wally Kraemer
Score: 102

3rd Place: Jerry Bass, Tom Farrell, Ken Buchholz & Ron Peralta
Score: 106

4th Place: George Steele, Mike Vance & Bob Tutoni
Score: 107

5th Place: Doug Olds, Ed Douglas, Skip Ford & George Strom
Score: 108

Closest to the Hole
#2- Rocco Guarnieri (5'11")
#4- Tom Herron (6'3")
#-6 Richard Tevis (5'3")
#9- Ed Douglas (2'4")
#11- Bob Dyrland (8'9")
#13- Pat Faggiani (3'4")
#15- Bill Chenoweth (6'1")
#17- Bob Bailey (9'4")

November 23, 2016
3 Low Net Score- 2 Flights
Flight-1
1st Place Nick Norado Al Beachum & John Nolan
Score: 172
2nd Place Joe McKinstry, Tom Herron, Dom Bosco & Pete Wayt
Score:175

3rd Place: Pat Faggiani, Kevin Fischer, Bernie Bailey & Dave Sanft
Score: 177

Flight-2
1st Place: Ed Douglas, George Chadwick, Bob Krause & Larry Dye
Score: 166

2nd Place: Bob Pacetelli, John Bolger, George Strom & Wally Kraemer
Score: 175
3rd Place: Jack Horner, Ken Buchholz & Abner Levey
Score: 180

Closest to the Hole
#2- Bob Krause (11'4")
#4- Ed Douglas (10'5")
#6- Tom Herron (4'9")
#9- TIE Pat Faggiani- Nick Norado (13'9")
#11- Bob Aldrich (10"0")
#13- Bernie Bailey (21'1")
#15- Tim Conroy (3'10")
#17- John Lengyel (10'6")

November 30, 2016
Team Stableford

1st place: Kevin Kescher, Dave Sanft, Dick Gherlone & Abner Levy
Score: +8

2nd Place: Joe McKinstry, Dom Bosco, Rob Connors & Bob Krause
Score: +4

3rd Place: Bill Chenoweth, Tom

Farrell & George Chadwick
Score: -3
4th Place: Tim Conroy, Tom Herron, Bob Tutoni & Larry Dye
Score: -5

5th Place: Kurt Gripentrog, Pete Wayt, Ken Buchholz & George Strom
Score: -5

Closest to the Hole
#2- Bill Chenoweth (6'11")
#4- Pete Wayt (5'0")
#6- Joel Howell (12'8")
#9- Tom Farrell (11'1")

#11- Bob Bailey (19'0")
#13- Joel Howell (8"2")
#15- Jerry Bass (5'3")
#17- George Chadwick (12'10")

2016 Club Championship

Palmer Flight
1st Place Gross: Paul George
Score: 208
1st Place Net: Jerry Bass
Score: 189

2nd Place Gross: George Steele
Score: 222

2nd Place Net: Tom Herron
Score: 194

Nicklaus Flight
1st Place Gross: John Lengyel
Score: 223
1st Place Net: Joe McKinstry
Score: 194
2nd Place Gross; Greg Niehaus
Score:241
2nd Place Net: Bernie Bailey
Score: 209

Player Flight
1st Place Gross: Bill Baril
Score: 232
1st Place Net: Richard Browning
Score: 185
Player Flight Cont.
2nd Place Gross: Ed Domagal
Score: 244
2nd Place Net Bob Pacetelli
Score: 188

Perry Flight
1st Place Gross: George Chadwick
Score: 262
1st Place Net: Glen Soderberg
Score: 202
2nd Place Gross: Skip Ford
Score: 263
2nd Place Net: Bob Krause
Score: 203

Overall Gross Champion
Paul George
Score: 208
Overall Net Champion
Bill Baril
Score: 184

Jameson Award
Bob Aldrich presented the Jameson Award for 2017 at the 4th Quarter General Membership Meeting and Luncheon 12-14-16. Bob along with Art Grayson and the late Lee Sanders worked since September on a nominee list. The recipient of the 2017 Award was given to. Richard Tevis, for his contribution to make the MGA better everyday. Congratulations to Richard.

National Cremation
SOCIETY®

CONSIDERING CREMATION?

Come join the National Cremation Society for a

FREE LUNCH & INFORMATIONAL SEMINAR

THE ROOST AT CRANE LAKES

Tuesday, January 24th & Friday, February 3rd

11:00 AM & 1:30 PM

CALL TODAY TO RSVP 904.574.5004

RESERVATION REQUIRED. LIMITED SEATING AVAILABLE. FIRST TIME ATTENDEES ONLY PLEASE.

www.NationalCremation.com

Need Insurance for your Manufactured Home?

2 Locations to Serve You

Commercial Coverages, Inc. proudly offers personalized customer service, and hand-picked dependable insurance companies that assure you the best coverage, rates and claims service possible. We are always looking for new companies and new offers that we can pass on to our clients for more savings.

Great rates for homeowners insurance, covering:
Volusia County
Flagler County
St. John County
And Surrounding Areas...

In business since 1966, locally owned and operated.

Call Today (386) 756-8551

Celebrating 50 YEARS 1966-2016 In Business

CCI
Commercial Coverages, Inc.
A Full Service Insurance Agency

Email: danas@commercialcoverages.net

1000 Pelican Bay Drive • Daytona Beach, FL 32119 • (386) 756-8551 • Fax (386) 756-2344
4861 Palm Coast Parkway N.W. • Unit 5 • Palm Coast, FL 32137 • (386) 446-2330 • Fax (386) 447-7160

Bankers Alliance Insurance Group

Your one-stop solution for Homeowners Coverage

Get Your Manufactured/Mobile Home Insurance Quote Now!

Take this opportunity to find out how Bankers Alliance Insurance Group will help you to get the best coverage available for your mobile or manufactured home at the best price possible!

Specializing in YOUR Manufactured Home Insurance needs

We Shop Mulitple Companies for You!

Call us toll free

800-568-5163

"Se habla español"

Apply Online!

www.baigonline.com

Bankers Alliance Insurance Group is a proud member of the Federation of Manufactured Home Owners of Florida and the Better Business Bureau

Trusted Choice®

FMO

BBB Start With Trust

PORT ORANGE HANDYMAN
TODD SEGER
CRANE LAKES RESIDENT
LARGE OR SMALL WE DO IT ALL!
25 years Exp. Gen. Contractor
CALL TODAY: 386-882-8022
POHandyman@hotmail.com
*MASTER PAINTER & FAUX ARTIST
We Repair Water Damage
*Now Sell Granite Countertops
Starting @$29.95sq/ft*
Flooring And Baseboards
*PLUMBING FIXTURES & REPAIR
*DRYWALL REPLACE & REPAIR
*LIGHT FIXTURES*GARBAGE DISPOSAL
*ROOF REPAIRS*GARAGE STORAGE
*BATHROOM & KITCHEN UPDATING
*SCREEN REPAIR*GUTTERS REPAIR
& CLEANING
*WE DO ALMOST ANYTHING!
** CALL TODAY**

R & O HOME SERVICES
29 YEARS
THE VERY BEST IN
"PRESSURE CLEANING"
AND EXTERIOR HOUSE DETAILING
NEW
3 STEP VINYL SIDING
PAINT SERVICE
386-756-0350

SKYLIGHTS AND SOLAR ATTIC FANS

SKY FLEX Skylights & Solar Fans

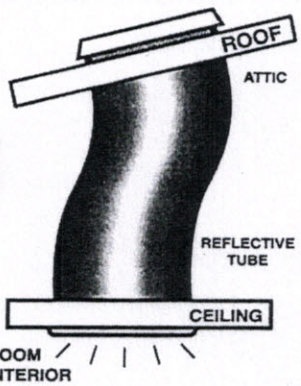

Mention this ad for your special Crane Lakes Resident Discount!

ULTRA BEAUTY, INC.
Family Owned and Operated for 29+ years!
www.SkyFlexUSA.com
GUARANTEED NO LEAKS!
FREE ESTIMATES!
BBB ACCREDITED BUSINESS
Angie's list SUPER SERVICE AWARD
CALL TODAY: 756-1200

We Can Do
Most of Your
Home Upkeep and Repair

We have 100's of Recommendations
probably some of them are from your neighbors.

With One Call You Can Arrange:

Painting
(Outside/Inside)
Landscaping
Tree Trimming
Gutter Cleaning
Roof Service
Minor Roof Repair
Driveway Painting
General Repairs

Call Ken
386-846-5664
Licensed and Insured

bright house NETWORKS | Spectrum

Bright house is now Spectrum

KEEPING YOU CONNECTED

TV

Exclusive programming like Bay News 9, News 13,
NY1 News, InfoMas, and Bright House Sports Network
Watch Video On Demand and stream Live TV anywhere you
have Internet access with the BHTV app

INTERNET

Choice of speeds – up to 300 Mbps – to meet your needs
Use the BHN WIFI Finder app to locate over 40,000 FREE WIFI HotSpots in Florida

PHONE

Unlimited Nationwide calling in the U.S., and to Puerto Rico and Canada
International Long Distance plans to 50+ countries

HOME SECURITY

Arm/Disarm your system and control your lights and thermostat remotely,
online, or from the in-coming touchscreen
24/7 monitoring by the Emergency Response Center

1-855-286-2971 | Brighthouse.com | Spectrum.com

Serviceable areas only. Some restrictions apply.
Products and price of equipment and services subject to change.
Start Over is a registered trademark of Time Warner Cable Inc... used under license.

WHY RISK YOUR MOVE...

With Just ANY Mover? Call the BEST!

- Family Owned & Operated
- Full Value Protection
- Expert Packing & Crating
- Climate Controlled Storage
- Local, National & International Relocations
- Competitively Priced
- Optimum Protection
- Fast, Personal Service

FREE Wardrobe Boxes

FREE ESTIMATES

THE NEWS-JOURNAL READERS' CHOICE BEST AROUND

J&M AMERICAN

Serving Central Florida Since 1981

(386) 761-6181 • (800) 308-2256
www.jandmmoving.com
sales@jandmmoving.com
FL REG IM1

Attention To Detail
Power Washing Inc.

Professional and Affordable Pressure Washing
Decks- Driveways-Gutters-Homes- Patios
Pool Enclosures- Roofs- Sheds- Sidewalks

Fully Licensed and Insured
Office 386-410-5162 Tony Cell 407-399-5866

569 Aeolian Drive New Smyrna Beach, Fl 32168

We accept Visa Discover MasterCard

Celebrating Our
GULF ATLANTIC VEHICLES
25th Anniversary

Club Car
EZGO
A Textron Company
GEM

-Authorized Dealer
-New & Used Sales
-Service
-Parts
-Accessories
-Trades-ins Welcome
-Financing Available
-Car Buying Tips on Website

3298 Pioneer Trail•New Smyrna Beach
386-427-9778
www.GulfAtlanticVehicles.com

COASTAL FLORIDA MOBILITY
386-256-4091
3761P S. Nova Road
Port Orange, FL 32129
(Next to Kilmans Jewelry in Park Place Plaza)

We provide a wide range of home medical equipment to help improve your quality of life.

Daytona FLEA & FARMERS MARKET

More Choices, More Value, More Fun!

1000 Booths!

EVERY
Fri, Sat & Sun
9 to 5
Rain or Shine

The Market features:

2 Air Conditioned Malls
2 Restaurants
9 Snack Shacks
9 Aisles Under Roof
1 Outdoor Aisle
Plant Nursery
Fruits, Vegetables & Herbs
Home Decor
Fine & Costume Jewelry
and much more!

Pets welcome when in strollers or carriers.
Wheel chair rentals available.
Visit our website to see all we have to offer!

RANKED 6th BEST IN THE WORLD!

FREE Parking
FREE Admission

DaytonaFleaMarket.com

Find us on Facebook

Classic Car Cruise-In – 1st Saturday EVERY month!

Art & Craft Show – 2nd Sunday EVERY month!

1425 Tomoka Farms Rd, Daytona Beach FL 386.253.3330

Just a Mile West of the Speedway!

DOUG CROLL
NO JOB TOO BIG OR SMALL

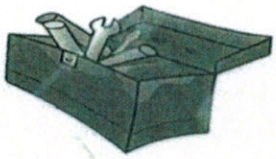

Painting and Remodeling
Electrical and Plumbing
Storage and Closet Design
Wood Flooring
General Repairs

386-562-5568
Crane Lakes Resident
Licensed & Insured

Licensed / Insured

mohneyaluminum@aol.com

Mohney
Aluminum & Construction
Working Locally Since 1985

- *Glass Rooms*
- *Screen Enclosures*
- *Patios*
- *Siding*
- *Carports*
- *Roofovers*
- *Windows*
- *Leaks Repaired*

Mike Mohney *CRC 1326636*
State Certified Residential Contractor

(386) 767-8837
Concrete Work Available

MOBILE HOME DEPOT
Your Mobile Home Parts Warehouse!

- **DOORS**
- **A/C UNITS**
- **Low-E WINDOWS**
- **ALUMINUM PRODUCTS**
- **54"x27" TUBS / SHOWERS**

We Install A/Cs!
LIC# CAC1818340

DAYTONA
2150 S. Nova Rd.
(386) 756-2525
M-F 8-5pm, Sat. 9-3pm

www.mobilehomedepot.net
Like us on Facebook

Residential/Commercial Pest Control & Lawn Care
CALL TODAY FOR A FREE ESTIMATE!
In Home Pest Control
Termite Pre-Treatment
Termite Inspection & Treatments
Lawn Care
Shrubs & Trees

Aaron PEST CONTROL

Professional Service with a Hometown Touch Since 1963
386-252-3030 * aaronpest.com

The Crane Lakes management Office Publishes the Crane Courier monthly for the purpose of information and entertainment only. Some comments in the Courier may contain references or opinions and information created and maintained by others. Please note that Crane Lakes does not and cannot guarantee the relevance, timeliness, or accuracy of these outside remarks. The inclusion of any material in this Courier is not an expression of the management of typist's opinion and as to whether or not it is subject to investigation Crane Lakes provides no warranty, expressed or implied as to the accuracy, reliability or completeness of furnished Data.

Designed by Robert Sartori | 954-319-1970 | robert@sartoridesign.com

Reporters: HOA Board of Directors, HOA Committee Chairmen and Special Events Chairperson(s).

Crane Lakes

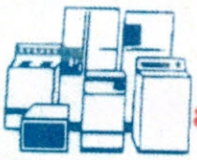

PAUL'S APPLIANCE REPAIR & HOME SERVICES LLC

30 Yrs. Experience

Service · Installations · Sales

Licensed *Insured*

Paul Sprague Sr.
910 Orange Avenue
Port Orange, Fl 32129

Office: 386-788-2066
Mobile: 386-538-1753

761-3138 **CERTIFIED PEST CONTROL** 760-4106

CRANE LAKES SPECIAL

ONCE A YEAR PEST CONTROL
includes 3 Quarterly Outside Perimeter Services

Only $109.00

WE OFFER TERMITE BONDS starting @ $95 per year.
THIS INCLUDES A FULL INSPECTION UNDERNEATH YOUR HOME.

BEST PRICES ON TERMITE TREATMENTS USING
TERMIDOR

****** WORK GUARANTEED IN WRITING ******
OVER 30 YEARS IN THE BUSINESS *BEST PRICES IN TOWN*
****VOTED BEST TERMITE/PEST CONTROL YEAR AFTER YEAR****

THE APPLIANCE GUY

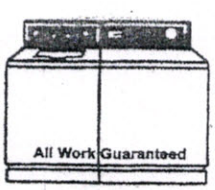

Service on
All Makes and Models
All Major Appliances

Prompt – Professional – Courteous – Service

386-677-7505

PORT ORANGE HANDYMAN
TODD SEGER
CRANE LAKES RESIDENT
LARGE OR SMALL WE DO IT ALL!
25 years Exp. Gen. Contractor
CALL TODAY: 386-882-8022
POHandyman@hotmail.com
*MASTER PAINTER & FAUX ARTIST
We Repair Water Damage
*Now Sell Granite Countertops
Starting @$29.95sq/ft*
Flooring And Baseboards
*PLUMBING FIXTURES & REPAIR
*DRYWALL REPLACE & REPAIR
*LIGHT FIXTURES*GARBAGE DISPOSAL
*ROOF REPAIRS*GARAGE STORAGE
*BATHROOM & KITCHEN UPDATING
*SCREEN REPAIR*GUTTERS REPAIR & CLEANING
*WE DO ALMOST ANYTHING!
** CALL TODAY**

R & O HOME SERVICES
29 YEARS
THE VERY BEST IN
"PRESSURE CLEANING"
AND EXTERIOR HOUSE DETAILING
NEW
3 STEP VINYL SIDING
PAINT SERVICE
386-756-0350

SKYLIGHTS AND SOLAR ATTIC FANS

SKY FLEX Skylights & Solar Fans

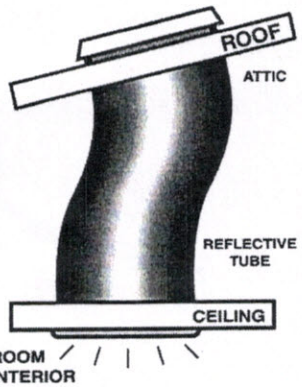

Mention this ad for your special Crane Lakes Resident Discount!

ULTRA BEAUTY, INC.
Family Owned and Operated for 29+ years!
www.SkyFlexUSA.com
GUARANTEED NO LEAKS!
FREE ESTIMATES!
BBB ACCREDITED BUSINESS
Angie's list SUPER SERVICE AWARD
CALL TODAY: 756-1200

LOOK

A Plus Pressure Cleaning,
Landscaping, &
Critter Catcher, LLC
$100.00 Special
House Wash, Driveway Cleaning
and
Gutter Cleaning of Leaves and Debris
Call Doug or Tim for Details
386-506-7927

DRIVING SERVICES
Serving the Port Orange Area
Airports-Errands-Appointments
RESERVATIONS:
386-788-0750
Marcia's Cell: 386-299-5853
Miles' Cell: 386-299-0316
NO SERVICE AVAILABLE
JANUARY 20TH – 29TH, 2017